Garrett
ADVANCING MOTION

ORIGINAL PERFORMANCE

Garrett® Flange Diagram **GTX3582R GEN II**

TurboTotal®
High Performance Tuning Parts

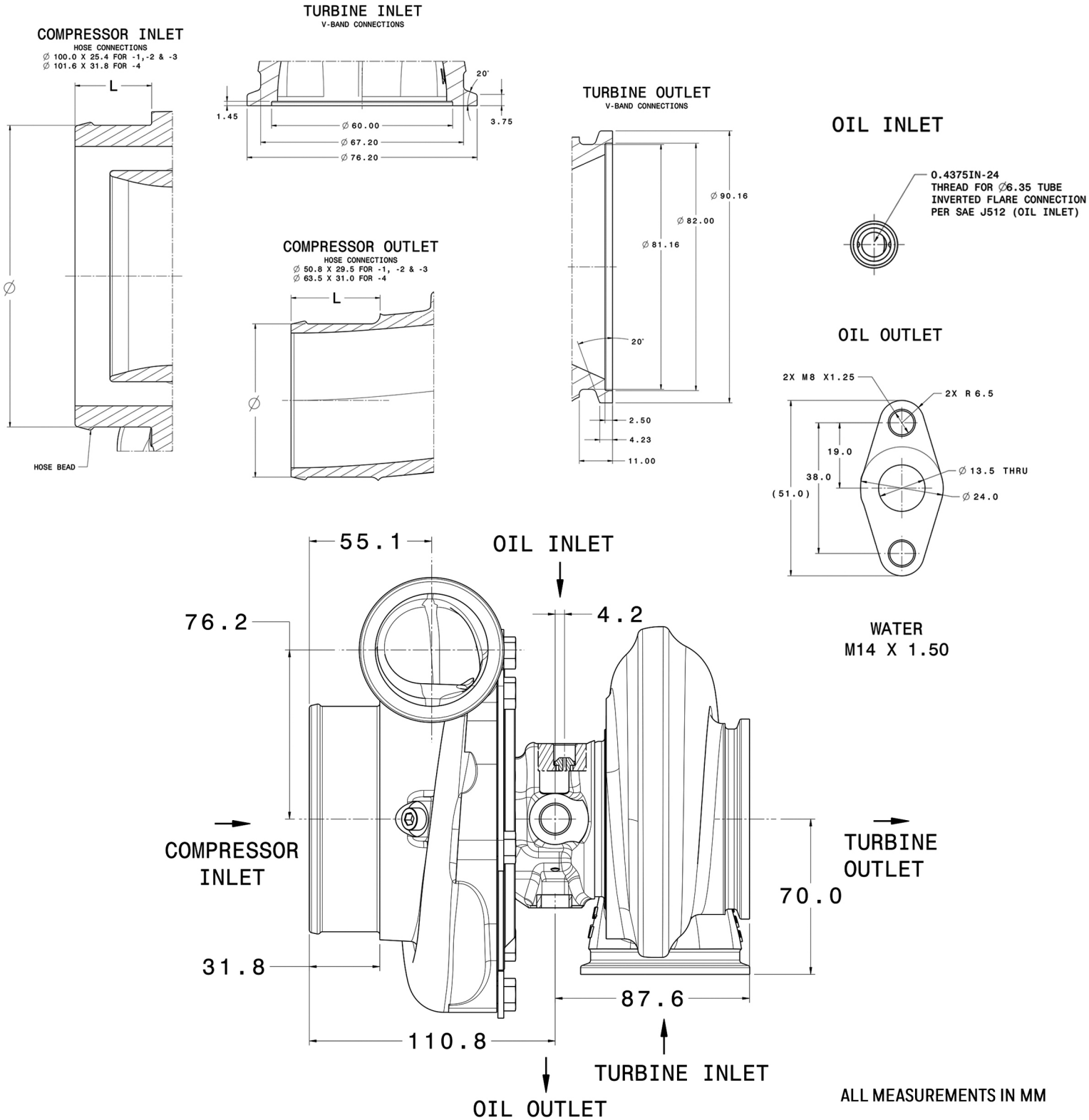

851154-4

© 2018 Garrett Motion Inc.

www.garrettmotion.com

Garrett
ADVANCING MOTION

ORIGINAL PERFORMANCE
GT30R / GTX30R - GT35 /GTX35R
Turbine Housing Flange Dimensions

GARRETT GT(X)30R, GT(X)35R TURBINE HOUSING
OUTLET FLANGE DIMENSIONS
HOUSING KITS 740902-0019 THRU -0036
(DIVIDED V-BAND, DIVIDED T3, OPEN V-BAND INLET)

ALL DIMENSIONS ARE ± 0.25 MM UNLESS NOTED

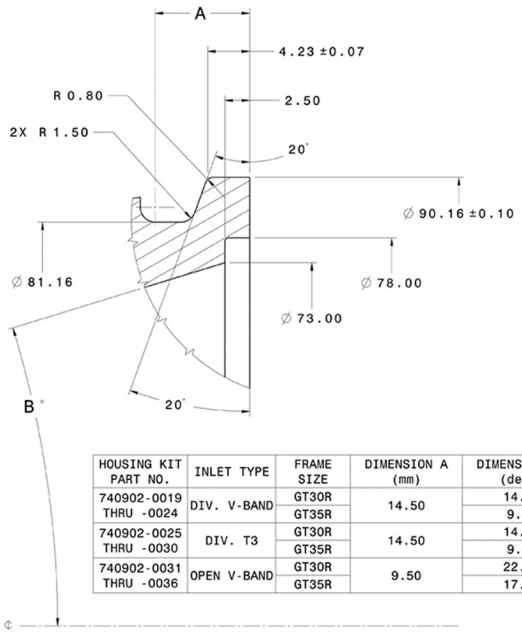

HOUSING KIT PART NO.	INLET TYPE	FRAME SIZE	DIMENSION A (mm)	DIMENSION B (deg)
740902-0019 THRU -0024	DIV. V-BAND	GT30R	14.50	14.1
		GT35R		9.4
740902-0025 THRU -0030	DIV. T3	GT30R	14.50	14.1
		GT35R		9.4
740902-0031 THRU -0036	OPEN V-BAND	GT30R	9.50	22.5
		GT35R		17.1

GARRETT OPEN V-BAND TURBINE HOUSING
INLET FLANGE DIMENSIONS
HOUSING KITS 740902-0031 THRU -0036

ALL DIMENSIONS ARE ± 0.25 MM UNLESS NOTED

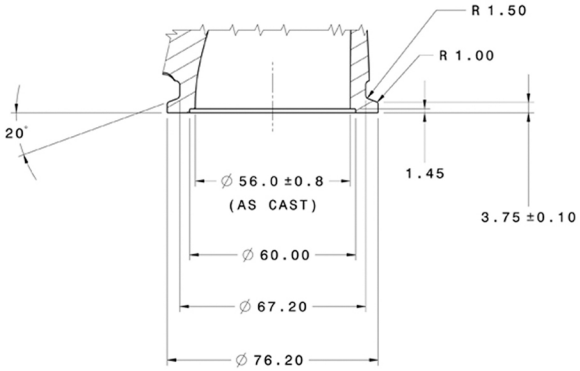

GARRETT TURBINE HOUSING INLET ADAPTER
FOR DIVIDED V-BAND TURBINE HOUSINGS
ADAPTER PART NUMBER 813444-0001
APPLIES TO HOUSING KITS 740902-0031 THRU -0036

ALL DIMENSIONS ARE ± 0.25 MM UNLESS NOTED
VIEW INTO MANIFOLD SIDE OF ADAPTER
INSERT 2.0 INCH MANIFOLD TUBING AND WELD AROUND O.D.
MATERIAL = HK30 STAINLESS STEEL

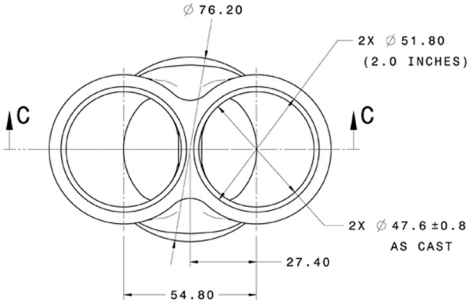

GARRETT DIVIDED T3 TURBINE HOUSING
INLET FLANGE DIMENSIONS
HOUSING KITS 740902-0025 THRU -0036

ALL DIMENSIONS ARE ± 0.8 MM UNLESS NOTED

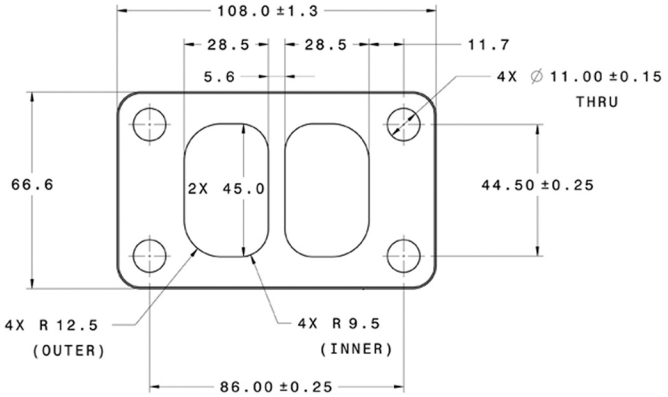

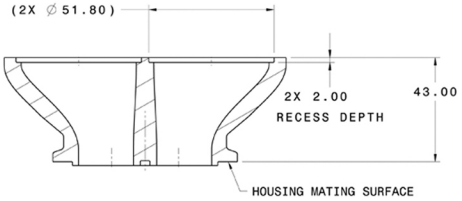

SECTION VIEW C-C
ADAPTER 813444-0001

ALL MEASUREMENTS IN MM

© 2018 Garrett Motion Inc.